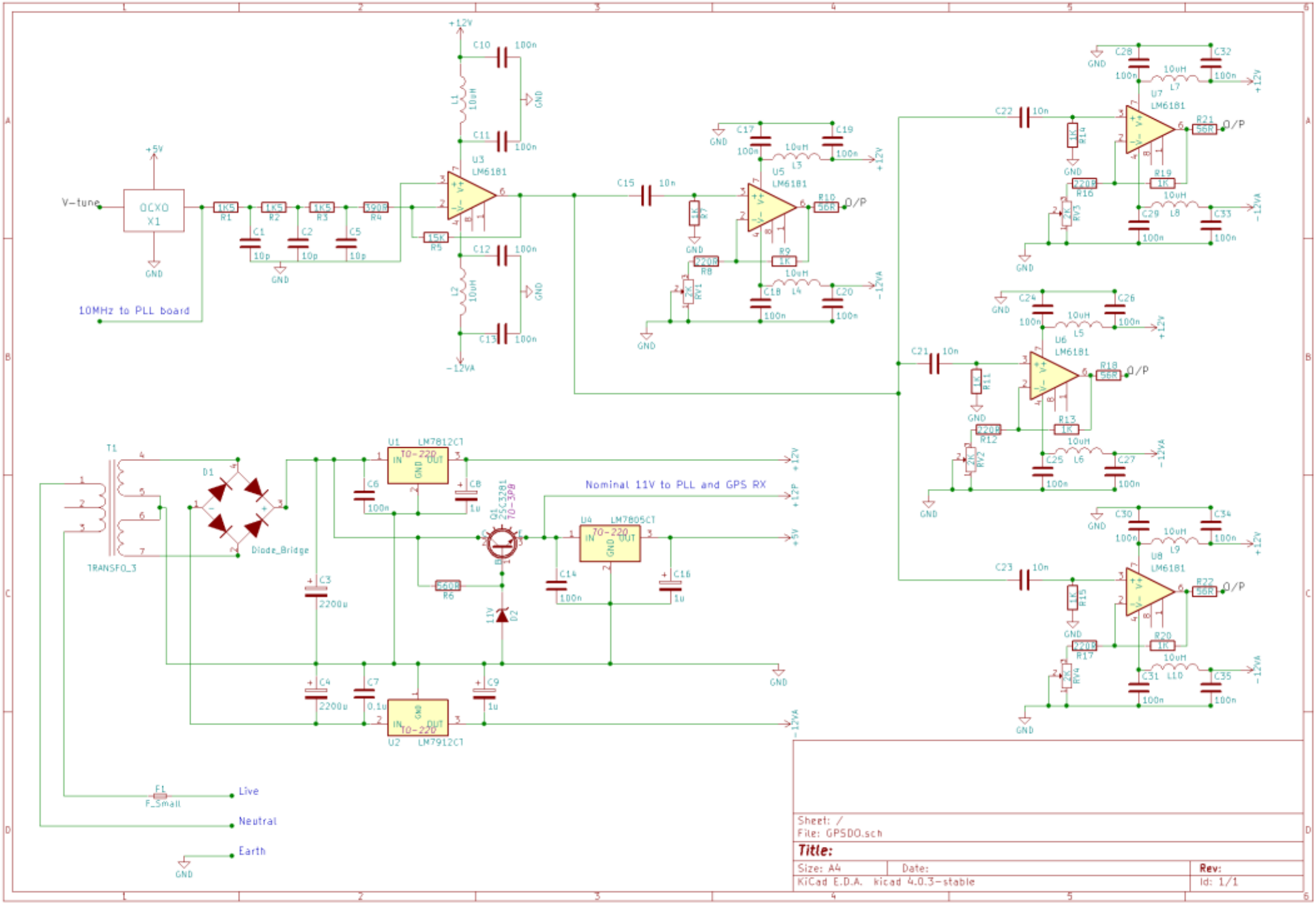
V-tune
OCXO
X1
+5V
GND
10MHz to PLL board
R1 1K5
R2 1K5
R3 1K5
R4 390R
R5 15K
C1 10p
C2 10p
C5 10p
U3
LM6181
+12V
-12VA
C10 100n
C11 100n
C12 100n
C13 100n
L1 10uH
L2 10uH
C15 10n
U5
LM6181
C17 100n
C19 100n
C18 100n
C20 100n
L3 10uH
L4 10uH
R10 56R
R9 1K
R8 220R
R7 1K
RV1 2K
O/P
U7
LM6181
C22 10n
C28 100n
C32 100n
L7 10uH
R21 56R
R19 1K
R16 220R
R14 1K
RV3 2K
C29 100n
C33 100n
L8 10uH
U6
LM6181
C21 10n
C24 100n
C26 100n
L5 10uH
R18 56R
R13 1K
R12 220R
R11 1K
RV2 2K
C25 100n
C27 100n
L6 10uH
U8
LM6181
C23 10n
C30 100n
C34 100n
L9 10uH
R22 56R
R20 1K
R17 220R
R15 1K
RV4 2K
C31 100n
C35 100n
L10 10uH
T1
TRANSFO_3
D1
Diode_Bridge
U1 LM7812CT
TO-220
IN
OUT
GND
C6 100n
C8 1u
C3 2200u
C4 2200u
C7 0.1u
C9 1u
U2 LM7912CT
Q1 2SC3281 TO-3PB
R6 560R
11V D2
U4 LM7805CT
C14 100n
C16 1u
Nominal 11V to PLL and GPS RX
+12P
F1
F_Small
Live
Neutral
Earth
Sheet: /
File: GPSDO.sch
Title:
Size: A4
Date:
Rev:
KiCad E.D.A. kicad 4.0.3-stable
Id: 1/1